098 - ASSEMBLE STEPS

PARTS LIST
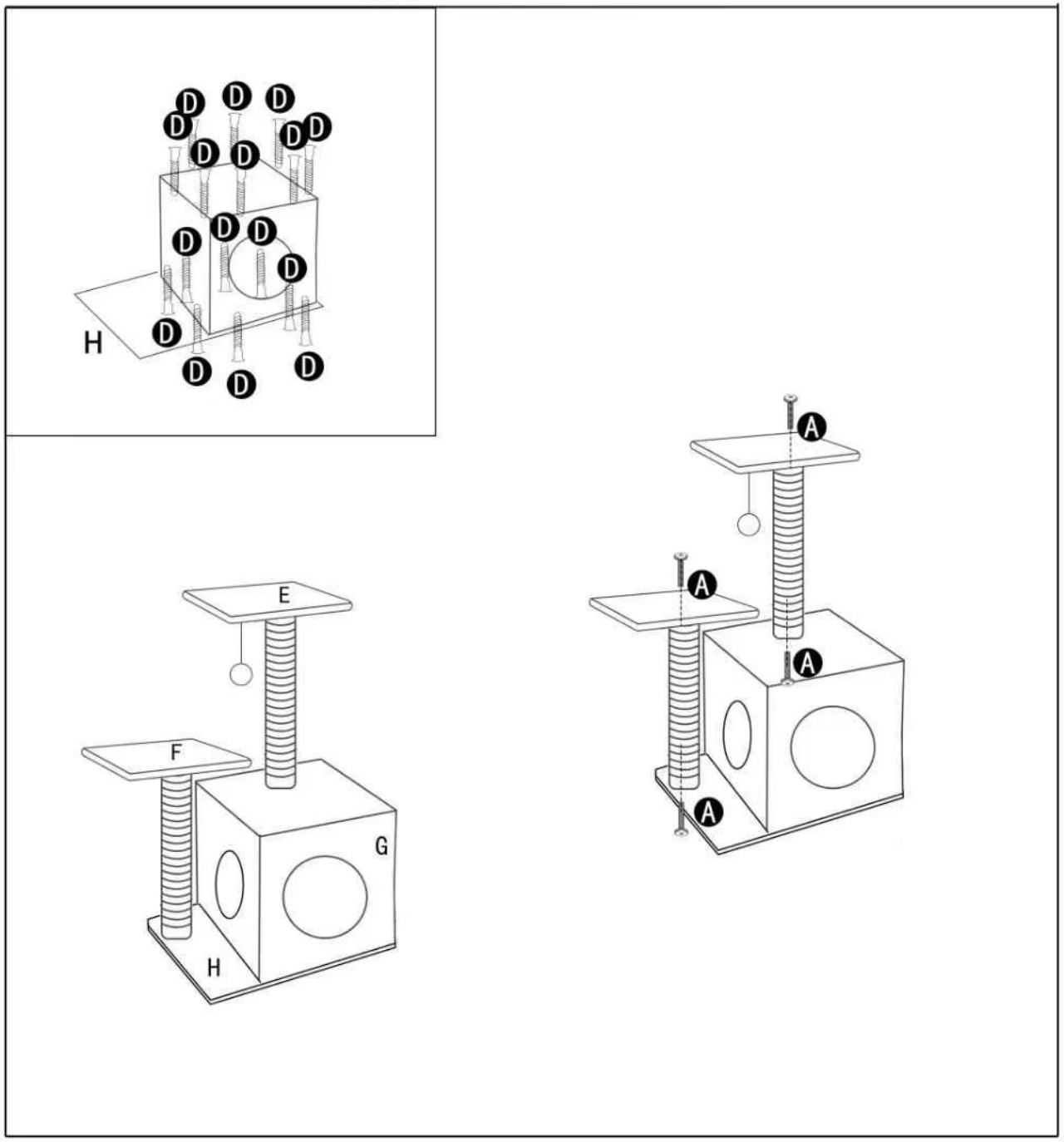
A Φ8*30mm 4pcs	B 1pc	C 1pc
D Φ5*35mm 16pcs	E 1pc	F 1pc
P1 35cm 2pcs	G 1pc	H 1pc